naggura'

SWOP PHYSIO PRO / UP

Technical drawings
to install a floor socket outlet.

Sizes in mm.

Distance from the side of the base

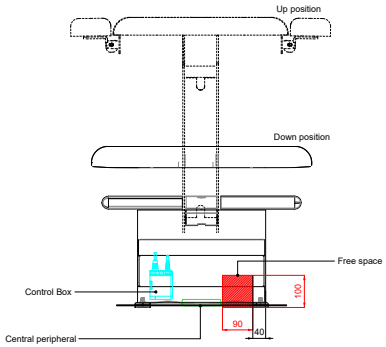
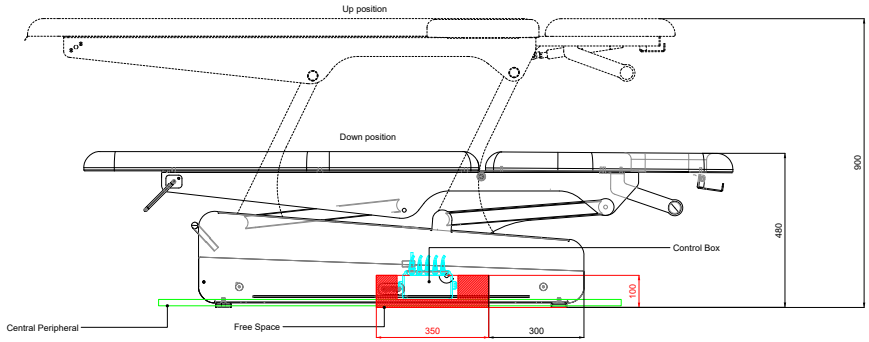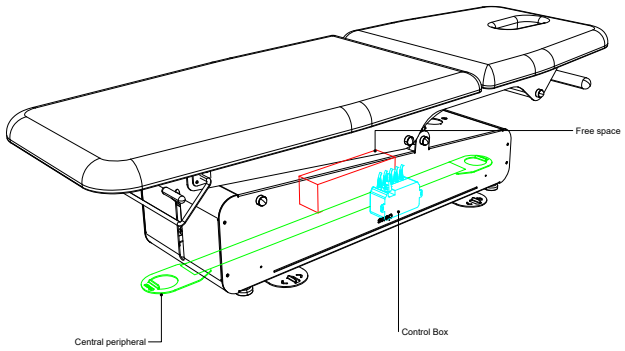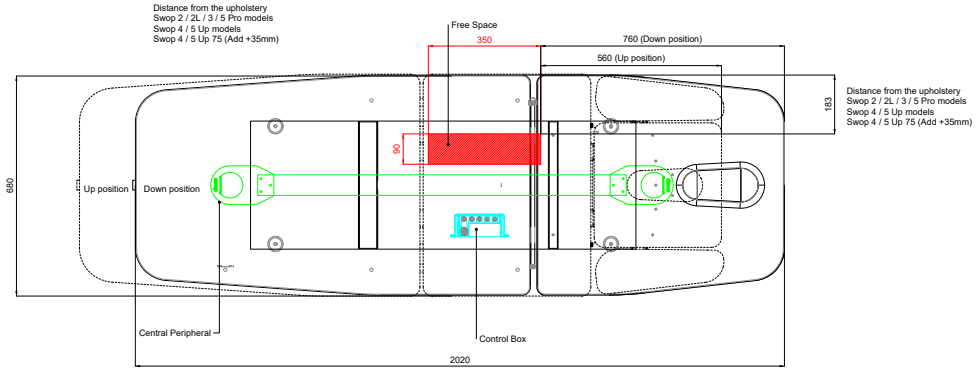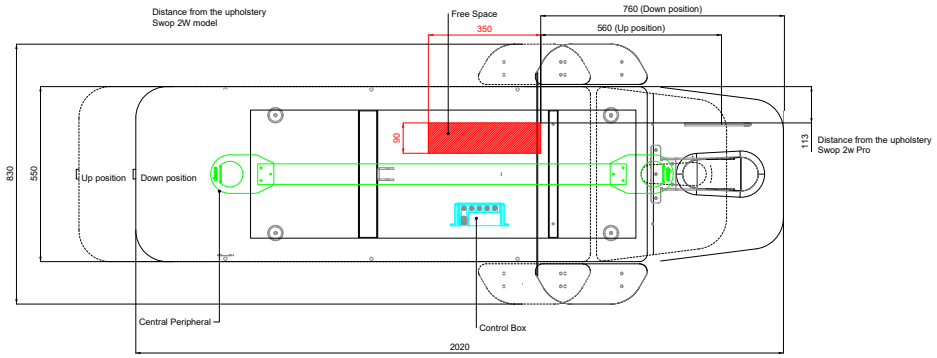
Distance from the end of the base