naggura

SWOP 2L STARTER

Technical drawings
to install a floor socket outlet.

Sizes in mm.

Distance from the side of the base

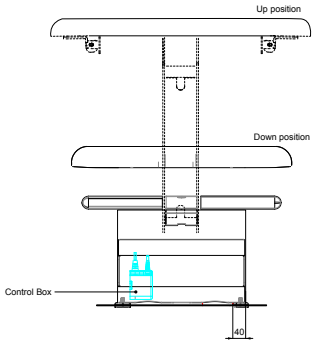

Distance from the end of the base

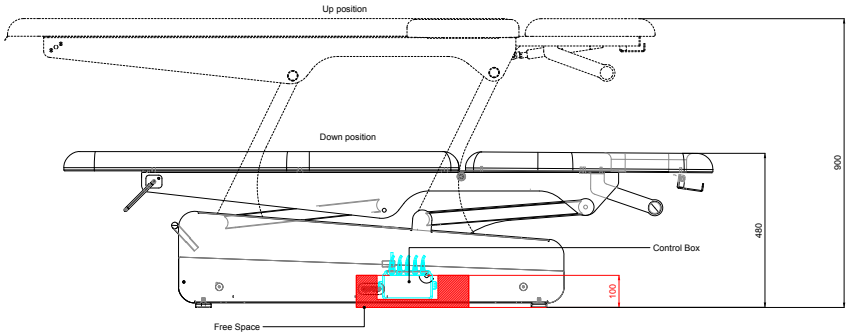

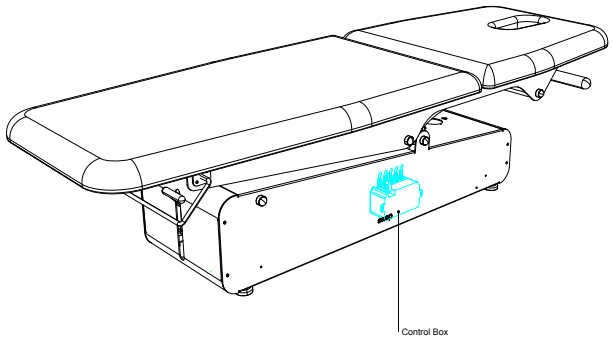
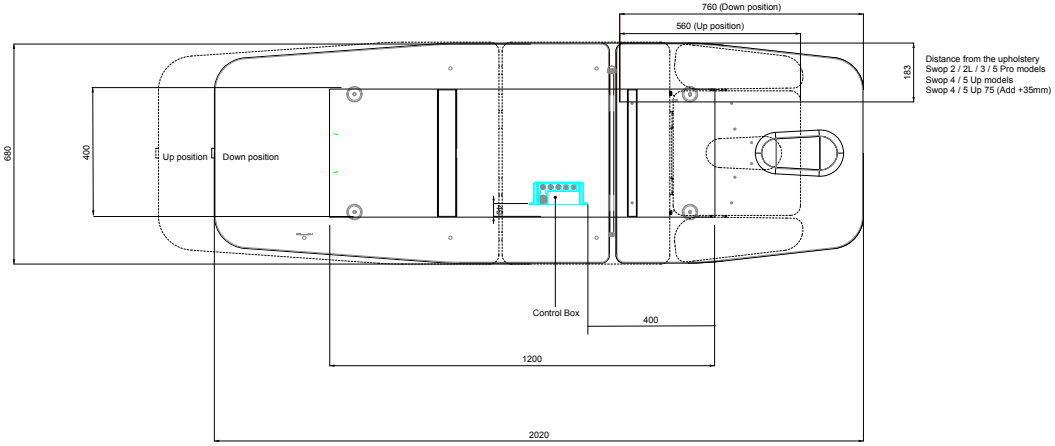
Distance from the upholstery
Swop 2L STARTER